Alle Rechte vorbehalten/ *All rights reserved*

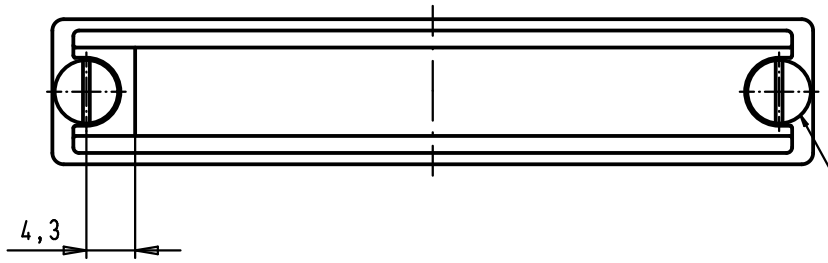

Slotted pan head tapping screws
DIN 7971-ST 2,9x6,5-F
screwing torque=35Ncm +/-5Ncm

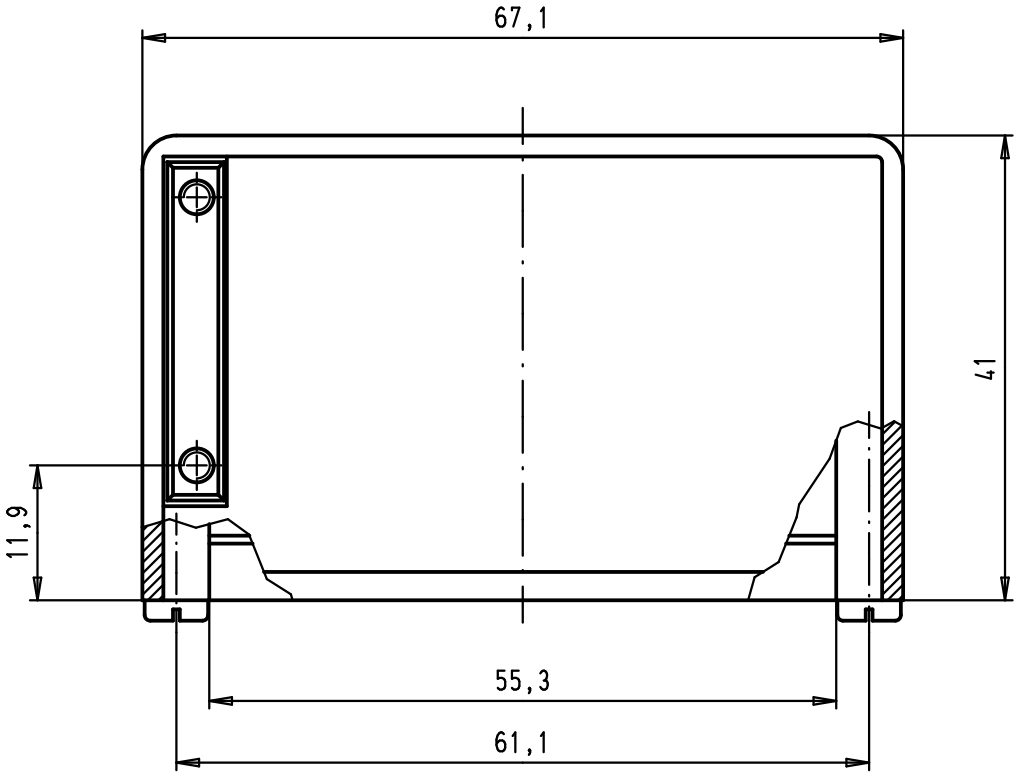

Slotted pan head tapping screws
DIN 7971-ST 2,2 x 9,5-F
Maximum screwing torque= 0,25 mN

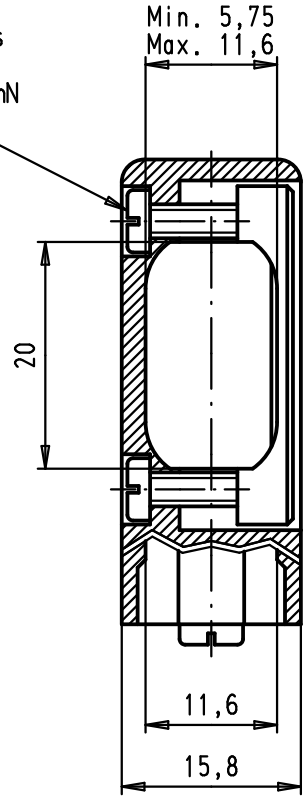

Part number	Material
09 67 050 0513	Thermoplastic metallized
09 67 050 0511	Thermoplastic grey RAL 7032

Mod.	Dat.	Name
EC03223	25-MAY-11	SD
34886	26/02/08	PK
29760	28/03/02	CV

	Dat.	Name
Detail.	28/03/02	CV
Insp.	25-MAY-11	JMDV
Stand.		

All Dim. in mm
Orig. Size DIN A 4

HARTING EURL
F-95972 Paris

D-Sub, hood 50 poles
for spring or slide
locking, side cable entry

Maßstab/ *Scale* 1,5:1

TB 09 67 050 051X

Sub.

Blatt/ *Page* 1/1